BULK MATERIAL HANDLING SOLUTIONS

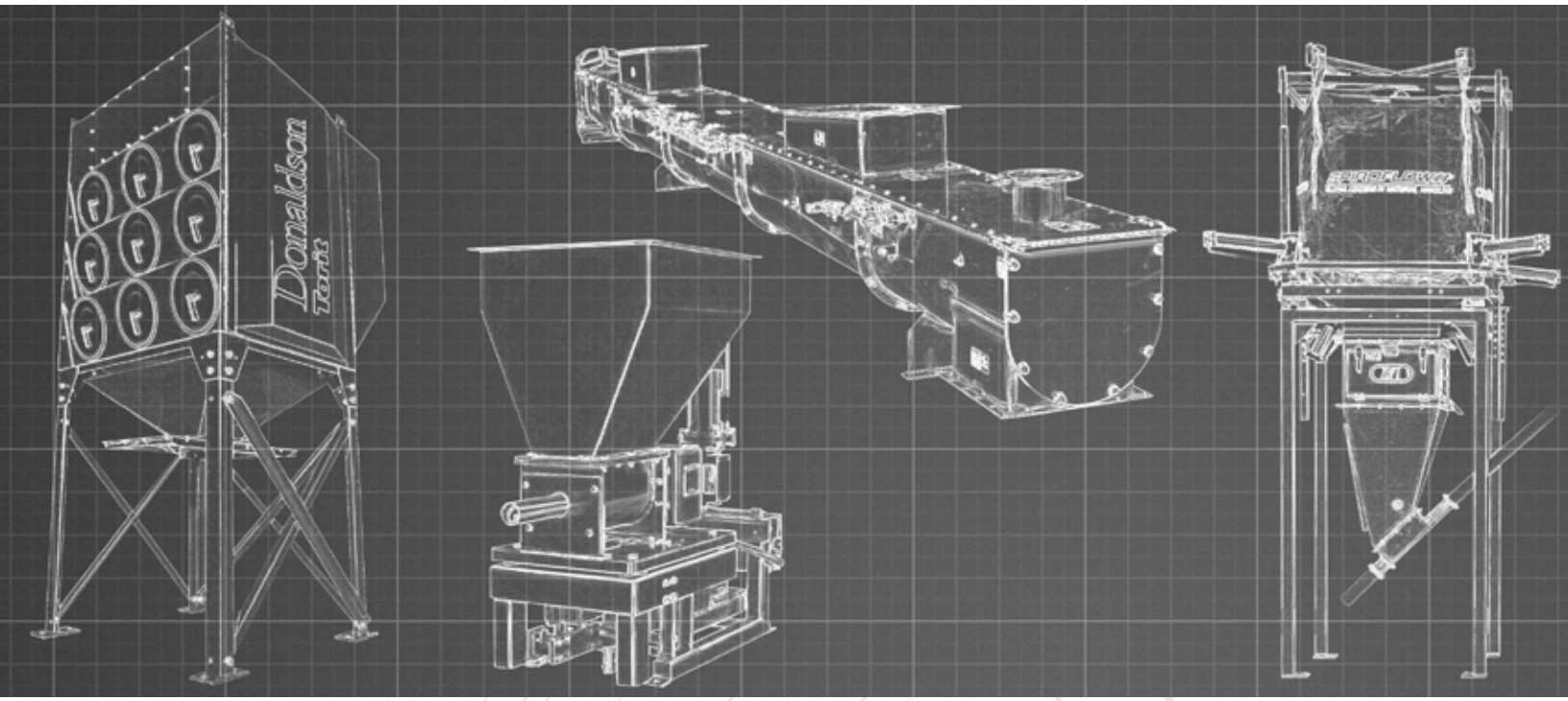

PNEUMATIC & MECHANICAL CONVEYING

WEIGHING, FEEDING & LEVEL DETECTION

DUST COLLECTION, DUCTING & CYCLONES

EXPLOSION MITIGATION AND PREVENTION

BULK DISCHARGE, FILLING & TRANSLOADING

MAGNETIC SEPARATION & METAL DETECTION

SIZE REDUCTION, GRINDING & COMPACTION

PACKAGING, STRETCH HOODERS & PALLETIZERS

ROTARY VALVES, DIVERTER VALVES & DEDUSTERS

SCREENING, SIZERS, SORTING, FLUIDIZED BED SPRAY & DRUM DRYERS AND COOLERS

APPROTEC RAN-LE

Approtec Ran-Le provides solutions for customers located in Texas, Louisiana, Oklahoma, Arkansas and Southern Mississippi. For more than 40 years, we have been providing material handling solutions to a wide range of industries. Projects range from bulk bag discharging and batching or pneumatically conveying plastic pellets to metal detection on a food packaging line or ultra high efficiency cyclones and wet scrubbers.

approtec
ran-le

approtec.com

Size Reduction

Fine Grinding and Milling Machines
Scalable Lab System™ (SLS)
Industrial Powder Screening
COMIL® Conical Mill

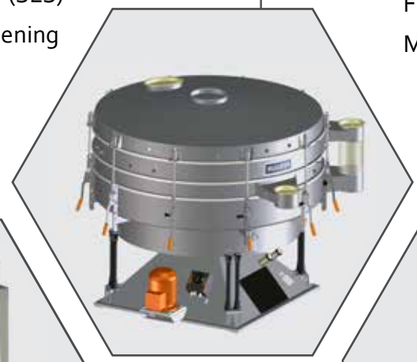

Drying and Screening Process Technology

Gyratory & Circular Motion Screening Machines
Tumbler & Vibratory Screening Machines
Fluidized Bed, Drum Dryers and Coolers
Mogensen Sizers & Sorters

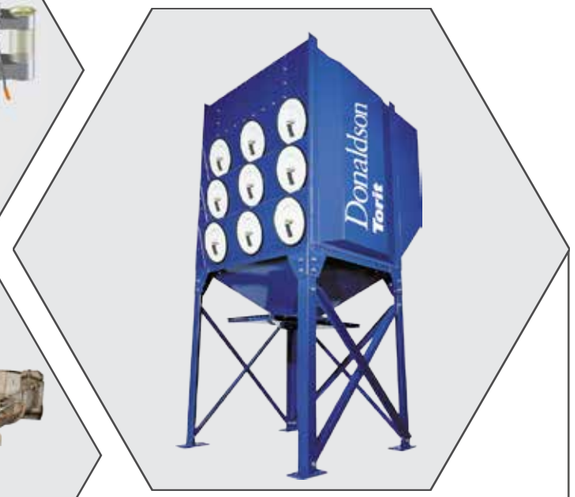

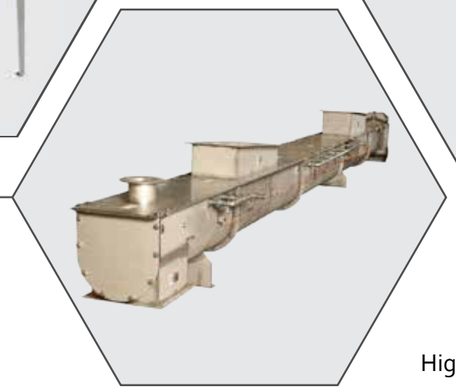

Mechanical Conveying Systems

Tubular Drag Conveyors
Aeromechanical Conveyors
Flexible Screw Conveyors
Belt & Chain Bucket Elevators
Overland Conveying
Conveyor Parts & Components

Air Pollution Control

High Pressure & Temperature Dust Collection
Particulate Monitoring & Control Systems
Wet Scrubbing & Packed Tower Systems
Baghouse & Pulse Jet Dust Collectors
Pollution Control / Product Recovery
Filter Bags, Cartridges & Ancillary Parts
Broken Bag Detection
Dry Sorbent Injection

Palletizing and Packaging

Plastics, Chemicals, Brick & Cement, Beverage
FillPac® RH / RV Impeller Filling System
Efficient and Precise Palletizing Lines
Stretch Hooders and Wrappers

Material Handling Valves

Medium & High Pressure Rotary Valves
Pneumatic Samplers
Spherical Disc Valves
Gas Tight Disc Valves
Plug Diverter Valves
Diverter Valves

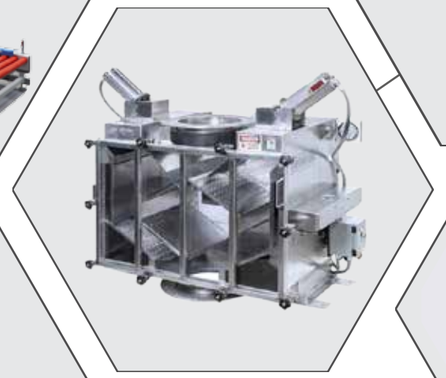

Bagging, Filling and Unloading

Bulk Bag Fillers with Cone Table Densification
Volumetric & Gravimetric Feeders
Bulk Bag Container Dischargers
Truck & Railcar Loading Spouts
Airslides & Mass Flow Feeders
Bulk Bag Conditioners

Pneumatic Conveying Systems

Engineered Weighing and Batching Systems
Pneumatic Blending and Mixing Systems
Electrical Process Controls Engineering
Dense Phase Pneumatic Conveying
Sanitary Vacuum Transfer Systems
Housekeeping Vacuum Systems
DeDuster® Systems

1976 John Lewis founded Ran-Le & Associates

1994 Gary Sealy founded Approtec Equipment Sales

2007 Approtec acquires Ran-Le to form Approtec Ran-Le

2010 Tony Kniffen & Brian Vandenberg purchase Approtec Ran-Le

2017 Approtec Ran-Le acquires RK Wilson & Associates

approtec ran-le

BULK MATERIAL HANDLING SOLUTIONS

NOL-TEC SYSTEMS
- Pneumatic Dense/Dilute Blending Systems
- Electrical Process Controls Engineering
- Engineered Weighing & Batching Systems
- Sorb-N-Ject® For Dry Sorbent Injection

piab
- Compact Vacuum Transfer Systems
- ATEX-rated and Simple Quick-Clean
- Compressed Air Driven Technology
- Sanitary, Safe and Gentle
- Industrial, Food, Pharmaceutical applications

pelletron
Discover Bulkmatology™ The Nature of Bulk Material Handling
- Pneumatic Conveying Systems
- Dedusters®
- Pellbow® Elbows
- Medium and High Pressure Rotary & Diverter Valves

thomas conveyor company
- Screw Conveyors
- Screw Feeders
- Drag Conveyors
- Industrial Bucket Elevators

Acrison
- Volumetric & Gravimetric Feeders
- Weight-Loss-Differential Feeder
- Batch/Dump Weighing Systems
- Weigh Belt and Weigh Auger
- In-Line Weigh Feeder / Flowmeter
- Continuous Volumetric Blenders

ERIEZ
- Plate & Grate Magnets
- Electromagnetic & Electromechanical Vibratory Feeders
- Metal Detection
- Recycling Metal Separation

PEBCO
The Material Handling Problem Solvers
- Aggregate, Frac Sand & Coal Experts
- Heavy Duty Gates / Diverters
- Truck & Railcar Loading Spouts
- Burner Isolation Valves, Airslides & Mass Flow Feeders

BEUMERGROUP
- Form, Fill, and Seal Packaging
- Robotic & High Level Palletizing
- Stretch Hooders and Wrappers
- Belt & Chain Bucket Elevators
- Belt & Chain Apron Conveyors
- Overland Conveying

spiroflow
- Bulk Container Fillers & Dischargers
- Tubular Drag Conveyors
- Aeromechanical Conveyors
- Flexible Screw Conveyors

QUADRO Leading Process Equipment Innovation
FITZPATRICK
- Size Reduction Equipment
- Chilsonator® Roll Compaction
- Lab Grinding Mills / Pharma Hammermills
- Course to Fine Grinding
- Comil® Conical Mill
- FlexSift® Centrifugal Screener

ALLGAIER PROCESS TECHNOLOGY
- Tumbler & Vibratory Screening
- Gyratory & Circular Motion Screening
- Mogensen Sizer
- Mogensen MikroSort® Sorting Systems
- Fluidized Bed, Drum Dryers & Coolers

MONITOR
- Rotary Point Level Indication
- SafePoint® Fail-safe Solutions
- SiloPatrol® On-Demand Level Indication
- SiloTrack Inventory Software
- Bluetooth and Cloud-Based Access
- Flexar® Guided Wave Radar

FilterSense
auburn SYSTEMS
- Triboelectric Monitoring Systems for Particulate Emissions & Processes
- Broken Bag Detection & Location
- Plant-Wide Emissions Monitoring & Management Systems

InterSystems
- Automatic Samplers
- Gravity and Pneumatic
- Cross Cut, Belt Sweep
- Automated Collection Systems

Donaldson Torit
- PowerCore® Dust Collectors
- Torit Downflo® Evolution Dust Collectors
- Dalamatic® Dust Collectors
- Filter Bags & Cartridges

FISHER-KLOSTERMAN EMTROL
A CECO Environmental Company
- Pollution Control / Product Recovery
- Ultra High Efficiency Cyclones
- High Pressure & Temperature Dust Collection
- Wet Scrubbing Systems
- Packed Tower Systems

Hi-Vac
- Industrial Vacuum Cleaners
- Wet & Dry Operation
- Mobile Vacuum Systems
- Central Vacuum Systems
- Truck Mounted Vacuums
- Vacuum Rebuilding Services

DUSTCON SOLUTIONS
CV TECHNOLOGY EXPLOSION PROTECTION
- NFPA Compliance Experts
- Explosion Isolation, Mitigation & Suppression
- Free Plant Evaluations
- Flameless Explosion Vents
- Dust Hazard Analysis & Testing

MEYER
- Rotary Valves
- Klean-in-Place® Rotary Airlock Valves
- Double Dump Valves
- Screwveyors

Roto-Disc
- Roto-Disc Spherical Disc Valve
- Roto-Blade Diverter Valve
- Roto-Flate Gas Tight Disc Valve
- Roto-Vert Plug Diverter Valve

JACOB
NO. 1 IN TUBING SYSTEMS
- Quick-Connect® Modular Tubing Systems
- Conveying to Dust Collection
- Blast Gates and Bends
- Diverters and Turnheads
- USDA & FDA Components

APPROTEC RAN-LE (HOUSTON)

info@approtec.com

335 Pennbright Dr.
Ste. 130 Houston, TX 77090

(281) 350 0550
www.approtec.com

BULK MATERIAL HANDLING SOLUTIONS

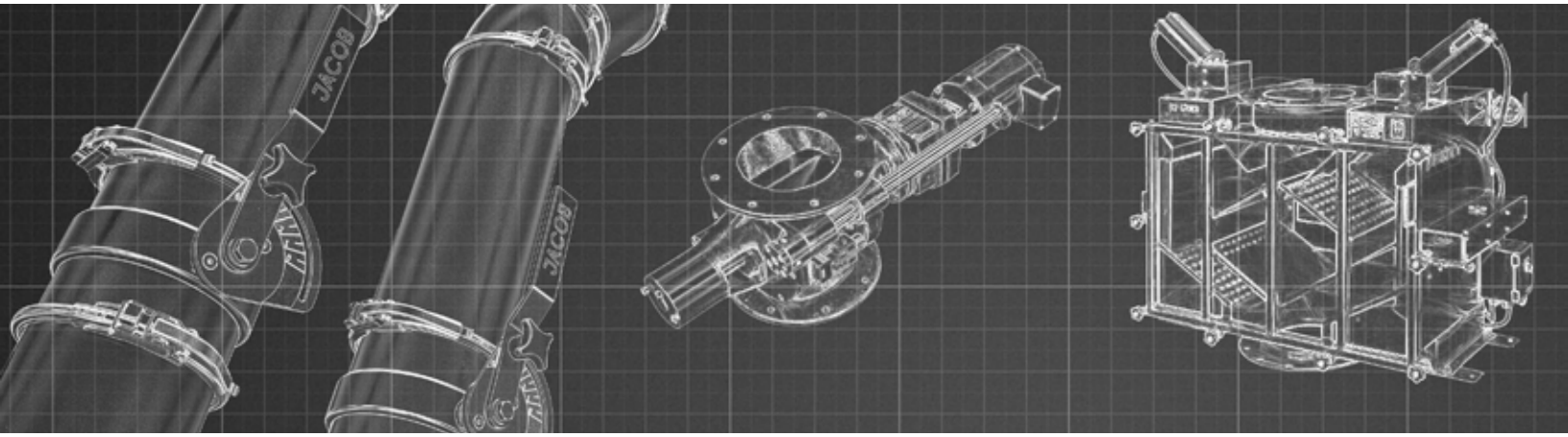

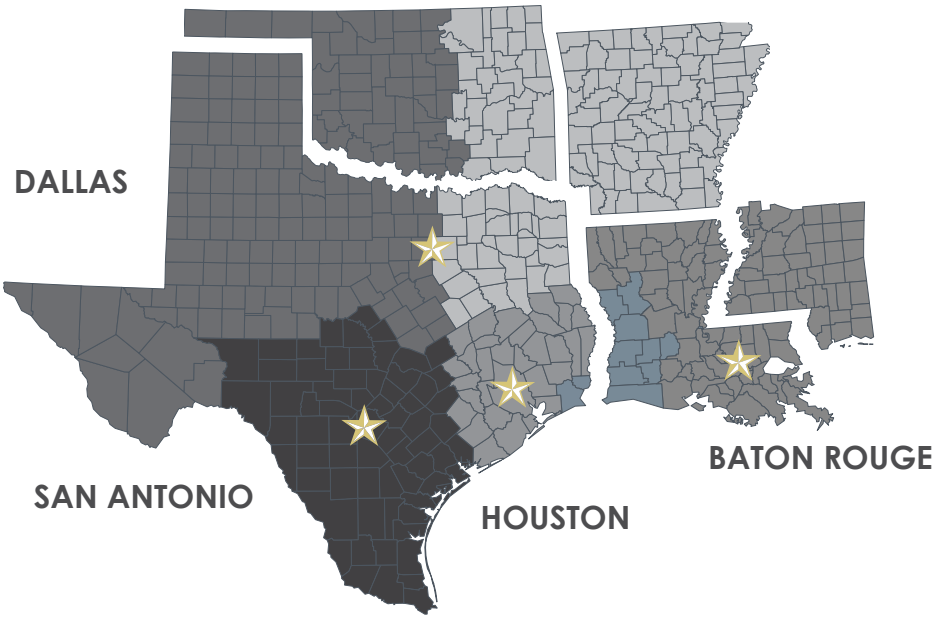

approtec ran-le

Proudly serving our customers for over 40 years. Supported by North American based manufacturing, our principles provide systems, components and replacement parts, and state-of-the-art test facilities.

www.approtec.com

Get in touch

Call us at (281) 350-0550 or send us an email at info@approtec.com

SAND | PLASTICS | PULP & PAPER | WOOD PELLETS

AGGREGATES | CEMENT | FOOD | CHEMICALS

2018 .v1